30 MW Heavy Fuel Burning Diesel Power Plant, Mollendo, Peru

Author: Colin W Dawson

Introduction

Mollendo is in Southern Peru, situated on the Pacific Coast. The closest major city is Arequipa, connected by road to Mollendo, the journey taking approximately two hours. The closest seaport is Matarani, which is only a short distance from Mollendo. The electrical power utility serving this area is Empresa De Generacion Electrica De Arequipa S.A. (EGASA) who has their head offices in Arequipa; they generate power for domestic and industrial use, including several mining operations.

Figure 1: Molendo Power Station - Peru 3 x 16 MB430V

In 1996, EGASA went out to international tender for a 30 MW, plus or minus 10%, heavy fuel burning diesel power plant. A Peruvian consulting company named S&Z prepared the plant specifications. Mirrlees Blackstone Canada bid the project as sub-contractor to a local Peruvian general contractor, Consorcio Hidroelectrico S.A. (COHISA). Generally speaking, M.B. Canada was to be responsible for the design and supply of all the electrical and mechanical systems and equipment, plus supervision of installation and commissioning; COHISA was responsible for the civil and structural works, the 13.8/138 kV transformer substation, complete installation and commissioning. The bid was successful and a contract signed commencing August 1996, with a contract completion date of October 1997.

This paper describes the technology utilised in the engine design, and in the associated systems design, which was considered state-of-the-art at the time of construction, in order to ensure the highest possible reliability, fuel efficiency and user friendliness. The design incorporates the expertise gained by Mirrlees Blackstone over the 50 years they have been involved in supplying heavy fuel burning medium speed diesel engines, for both power generation and marine propulsion.

Plant Design

Salient Features; The power plant specifications called for an installed capacity of 30 MW, plus or minus 10%, using three units of not less than 9 MW, capable of expanding to approx. 100 MW in two additional phases. The generating voltage was to be agreed, but stepped up to 138 kV at the transformer sub-station; a generating voltage of 13.8 kV was eventually agreed on as being the optimum. Three Miirrlees Blackstone model 16MB430 engines were selected for this application, operating at a speed of 514 rpm and a bmep of 23 bar; the engines are directly coupled to Brush Electrical Machines, frame BSM 140.168/14 synchronous generators, and each produces 10,566 kW at the generator terminals.

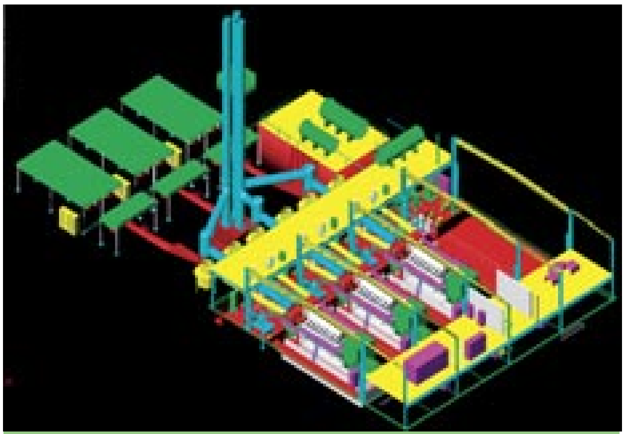

Figure 2: Molendo Power Station Model

The fuels to be used in the plant are R500 for power generation, which is a residual fuel from refineries in Peru, and distillate for start up and shut down. The R500 is a high viscosity fuel (1033 cSt @ 50 oC), higher than had been used in medium speed diesel engines up to that time, and the original intention was to blend the fuel with distillate to a lower viscosity, in the region of 650/700 cSt @ 50 °C. During the design phase Mirrlees Blackstone decided they would prefer to burn the R500 straight, rather than blend, due to potential problems of incompatibility between R500 and the distillate.

The two major problems to be overcome when burning the straight R500 are a) the ability of fuel treatment (centrifuges) to adequately clean the fuel, and b) the temperature of the fuel when heated to an acceptable viscosity for injection into the engine.

a) Previously, the stated max. viscosity for fuel treatment by centrifuging was 700 cSt @ 50 °C. Alfa Laval had been carrying out tests on heavier fuels and confirmed that the R500 could be successfully treated, providing that the centrifuges were de-rated i.e. the throughput reduced. This necessitated an additional centrifuge be added to the fuel treatment system; EGASA agreed to the additional cost, with the proviso that blending plant still be provided. The economics of this decision were based on not having to use higher cost distillate for blending, as it would take 7% distillate by volume to reduce the R500 to 650 cSt @ 50 °C.

b) In order to achieve the correct fuel viscosity for satisfactory fuel injection into the engine, the R500 fuel has to be heated to a temperature of approx. 150 °C; the comparable temperature for 700 cSt fuel is 130 °C. The engine components most affected by the higher temperature are the fuel injection pumps. The fuel pump manufacturer, in conjunction with Mirrlees Blackstone, had developed a fuel pump with improved high temperature seals and a special anti-seizure coating for the pump plungers, which were considered to be suitable for this application.

The specifications also called for the design and supply of a PLC based Supervisory Control and Data Acquisition (SCADA) system for control and monitoring of the power plant.

Engine Design

The first MB430 engine was installed in July 1987. Since then, in excess of one million operating hours have been accumulated, over 90% of which have been on heavy fuel operation. The engine design features which have been incorporated to ensure reliable operation and extended time between overhaul when operating on heavy fuel are:

- **Two – piece pistons** incorporating a heat resistant alloy steel crown and a nodular iron skirt. Piston crown cooling is effected by a pressurised oil supply to the undercrown cavity, via the drilling in the connecting rod. Top piston ring temperatures are kept below critical values to prevent sticking.
- **Cylinder liners** incorporating the latest flame ring technology, preventing bore polishing and giving consistently low lubricating oil consumption. The liners are intensively cooled where required using drillings, which convey water into the cylinder head via a water transfer ring. This design also prevents over-cooling of the cylinder bore, which leads to acidic attack.
- **Cylinder heads** with bore cooled flame face giving controlled intensive cooling where required. Exhaust valves in individual exhaust valve cages,

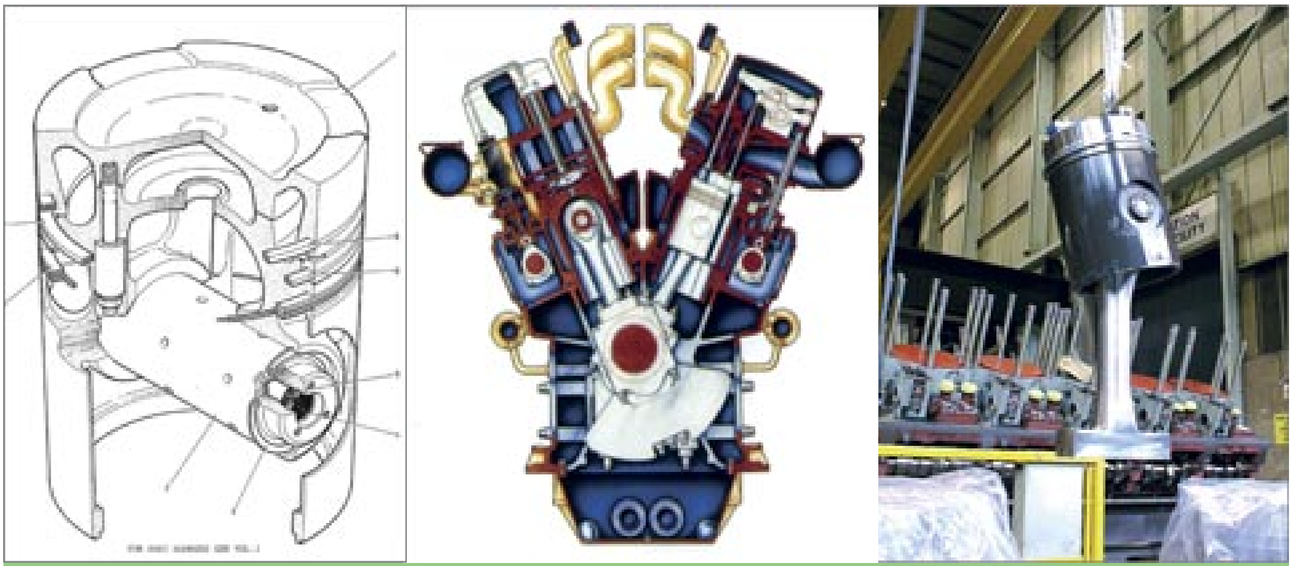

Figure 3: Mirrlees Blackstone MB430 Engine Cross Section (left), MB430 Piston Cross Section (middle), MB430 Connecting Rod Assembly (right)

Figure 4: Mirrlees Blackstone MB430 Engine

which are easily withdrawn for routine inspection and maintenance without removal of the cylinder head, thereby minimising downtime. Exhaust valve seats intensively cooled and valves fitted with rotators, to prevent the build up of harmful deposits. Valve stems lubricated to prevent acidic attack.

- **Fuel injection pumps** of the through-flow type for cooling and priming.
- **Fuel injectors** of the low inertia type with cooled nozzles to prevent sticking, seat softening and the formation of carbon "trumpets".

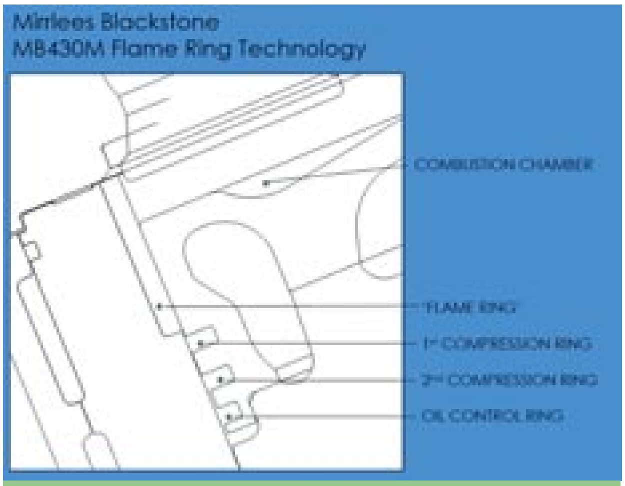

Figure 5: Mirrlees Blackstone MB340M Flame Ring Technology

Systems Design

Fuel System – The heavy fuel system can be divided into four-(4) stages:-

a) Bulk Fuel Transfer from PetroPeru terminal to the site installed storage tank.
b) Fuel Treatment and Blending.
c) Plant Ring-main System.
d) Engine Busrail System.

a) Bulk Fuel Transfer

PetroPeru have an oil terminal approx. 1.5 km from the Mollendo plant, situated on the coast. Mirrlees Blackstone sized and supplied the two transfer pumps, which are located at the terminal, and the pipeline to the 1477 m^3 (325,000-I gal) storage tank located at the power plant site. The capacity of the transfer pumps was specified as 2.77 m^3 /min (609 I gal/min.), and in order to keep the pressure loss in the pipeline, and hence the pump horsepower, to a reasonable level a 10 inch. diameter pipe was selected. This gives a total head loss of 200 psi, of which the head loss is 110 psi and the static head 90 psi., for a system hydraulic power consumption of 81.25 hp. The pipeline is insulated and electrically trace heated over the entire length to maintain a fuel temperature of 45-50 ^{O}C. The transfer of fuel is controlled manually.

Distillate fuel is delivered by tanker truck from the PetroPeru terminal, to a 180 m^3 (40,000-I gal) tank.

b) Fuel Treatment and Blending

The R500 fuel is delivered into the site bulk storage tank at 45-50 ^{O}C and is maintained at this temperature using steam coils in the tank. From this tank two (one operating / one stand by) pumps transfer the fuel to the 13.6 m^3 (3000-I gal) Pre-centrifuge Tank and are controlled by level switches in the tank. The interconnecting pipeline is steam trace heated and the tank has a steam coil to maintain minimum temperatures for pumping; both are insulated to conserve heat.

The fuel blending system is also installed in this pipeline, as shown on the diagram. The objective is to blend the R500 with distillate fuel to achieve a referred viscosity of 650 cSt @ 50 ^{O}C. It is necessary to use referred viscosity i.e. at a reference temperature, as the fuel temperature entering the blending system

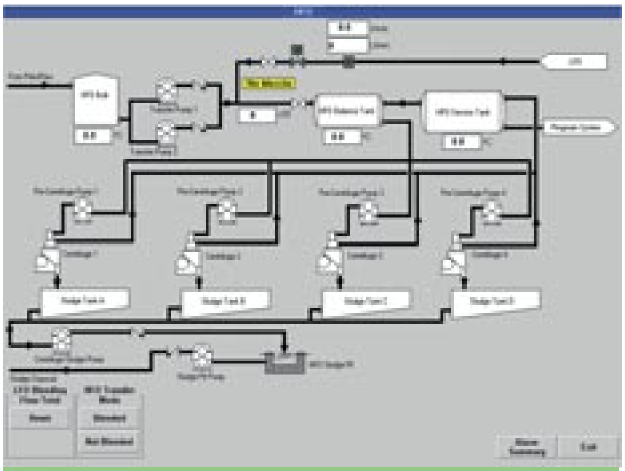

Figure 6: Heavy Fuel Oil (HFO) System

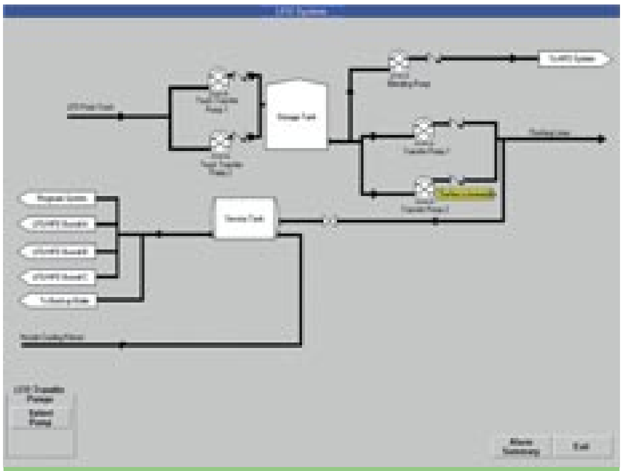

Figure 7: LFO (Distillate) System

will not be exactly 50 °C, therefore the system has to compensate for this. Referring to the diagram, the sequence of operation is as follows:

a) The level controls at the Pre-centrifuge tank starts the R500 transfer pump and the distillate fuel-blending pump and opens the distillate shut-off valve.

b) The Solartron 7827 Process Viscometer measures the referred viscosity of the blended fuel as it enters the Pre-centrifuge Tank and controls the addition of distillate via the Solartron 7945V Signal Controller and Samson 6496 PID Controller to maintain a set point referred viscosity of 650 cSt @ 50 °C. The distillate is added just downstream of the R500 transfer pump, which ensures thorough mixing in the 90 m of pipeline including several 90 deg. bends, before it reaches the 7827 Viscometer.

c) The level control on the Pre-centrifuge tank stops the R500 and distillate pumps and closes the distillate shut-off valve.

d) The sequence a), b) and c) is repeated as fuel is consumed from the Pre-centrifuge Tank.

As mentioned earlier, this system is not normally employed as provision has been made to use R500 straight, without blending.

Distillate fuel is transferred from the site storage tank to the Distillate Service Tank by a transfer pump that is controlled by level switches in the Service Tank.

The R500 heavy fuel is treated by centrifuging, designed to remove water to 0.1% by volume and sediment which is heavier than water to 5 microns. This is achieved using four (4) Alfa Laval Treatment Modules, arranged in parallel, three (3) operating, and one (1) standby. Three modules are capable of treating 9,600 l/h of R500, giving a margin of 28% over the flow rate required for three engines operating at 10% overload. Each treatment module is fed by a dedicated feed pump, drawing fuel from the Pre-centrifuge Tank; each module comprises of one Alfa Laval ALCAP model FOPX 611 Centrifugal Separator System, complete with all accessories for fully automatic operation, plus a Heatpac 100 Steam Heater for raising the fuel temperature from 50 °C to the optimum temperature for centrifuging of 98 °C. The advantage of the ALCAP machine is that it does not use gravity discs and therefore is unaffected by the fuel characteristics, up to a maximum specific gravity of 1.010.

During commissioning we discovered that the operating water pressure to these machines is critical and must be maintained within the specified range. For reasons explained later the treated water supply pressure went out of range during high demand periods, which resulted in carry-over of water into the treated fuel with disastrous consequences. Treated fuel from the centrifugal separators goes to the Heavy Fuel Oil (HFO) Service Tank, which is elevated on the roof of the fuel treatment building along side the Pre-centrifuge Tank. When the HFO Service tank is full it overflows back to the Pre-centrifuge Tank.

The base of the treatment module forms a sludge tank for collecting the water and sediment discharged from the centrifuge. A common pneumatically operated sludge pump is provided, operated by level switches in each of the module sludge tanks, arranged to transfer the sludge to the station sludge pit for further treatment and disposal.

c) Plant Ring-main System

The purpose of the ring-main is to provide a re-circulating loop of heated, pressurised, treated HFO with a tap-off to supply each engine. Two- circulating pump/heater combinations are provided, connected in parallel, one duty one standby, each having a flow rate equal to 1.5 x the total fuel consumption of three engines and operating at a nominal pressure of 3.45 bar (50 psig). HFO is drawn from the Service Tank that is mounted on the fuel treatment building roof, providing a static head of 4.26 m at the pump suctions. The HFO is re-circulated through the steam heater, a back-pressurising valve and back to pump suction. HFO from the ring-main is drawn into each engine busrail on demand, when the engine is operating on HFO. The temperature of the HFO in the ring-main is controlled by an Alfa Laval Viscochief viscometer, which is set to control the HFO viscosity at 12 cSt, by controlling the flow of steam to the heater. For the R500 fuel, this corresponds to a temperature of approx. 150 ^{O}C (302 ^{O}F). This temperature is relayed to each engine busrail system via the PLC, which then controls the busrail steam heater to maintain this temperature i.e. to compensate for any heat losses.

The controls are arranged so that the duty and standby pump/heater combinations can be changed on the fly. The ring-main equipment is modulised for ease of installation and maintenance.

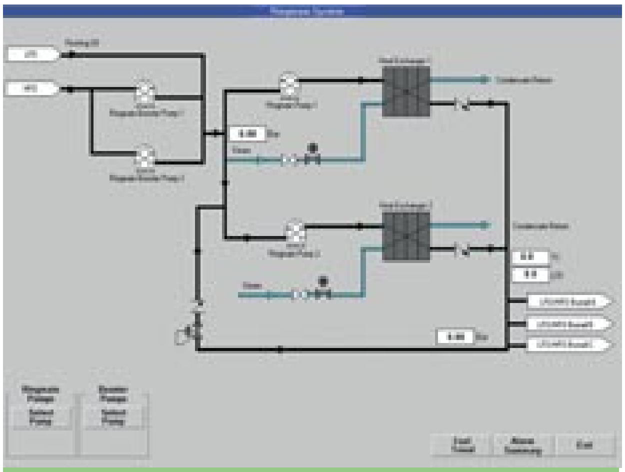

Figure 8: Ring Main System

N.B. Although this system design had been used successfully on three previous projects, problems were experienced with fluctuating pressure during commissioning. The circulating pumps were excessively noisy (rattling) which indicated that there was vapour in the system. Vaporising of the HFO was initially ruled out, as the lowest pressure in the system (at the pump suction) was well above the theoretical vaporising pressure at the operating temperature of 150 ^{O}C. As mentioned earlier water was discovered in the HFO Service Tank, that was traced to carry-over from the centrifugal separators and it was thought that this water was flashing- off to steam in the ring-main, as the temperature and pressure conditions were right for this. This may have contributed to the problem, but when the water had been removed the problem persisted. The fluctuating pressure in the ring-main affected the engine busrail pressures, leading to erratic engine operation and the inability to carry full load.

It had to be conceded that vaporising was taking place somewhere in the system and to resolve this problem two booster pumps (duty and standby) were installed in the pipeline from the HFO Service Tank to the ring-main pump suction. The pumps were mounted on the Treatment Building roof adjacent to the Service Tank and pressurise the fuel supply to 3.5 bar (50 psig.). A pressure control valve installed up-stream of the pumps, returns excess flow back to the Service Tank. This resolved the problem.

d) Engine Busrail System

The engine busrail system delivers either distillate or HFO to the engine. Both these fuel feed systems are arranged such that a pump re-circulates the fuel against a back- pressure valve, the fuel being taken from the system on demand.

The HFO loop is fed from the pressurised ring-main and the distillate is gravity fed from the Distillate Service Tank, which is mounted on the Treatment Building roof.

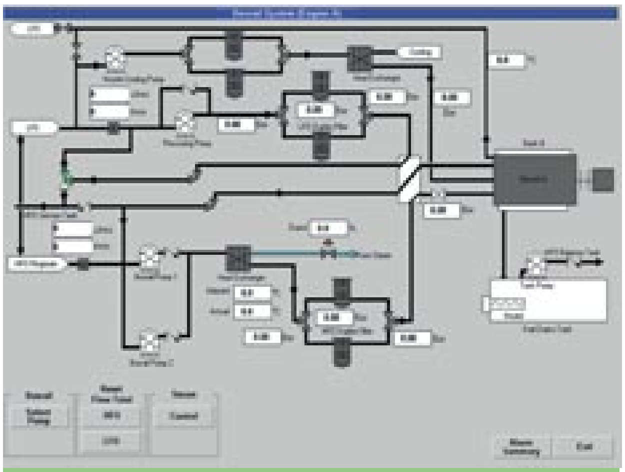

Figure 9: Fuel Busrail System

The busrail system is modulized for ease of installation and maintenance, as shown in the slide, and the module also houses the equipment for the engine fuel injector cooling system, which uses distillate as the cooling medium.

HFO is drawn from the ring-main, passes through a mass flow meter, booster pumps (duty and standby), steam heater, duplex 5 micron filter, ganged four-way change-over valves and into the engine. The flow rate is equivalent to 4 x engine consumption at a nominal pressure of 7.0 bar (100 psig). From the engine the HFO returns via the changeover valves, through a backpressure valve and to pump suction.

Fuel temperature is maintained at the ring-main temperature, plus 2 ^{O}C by the busrail steam heater, so

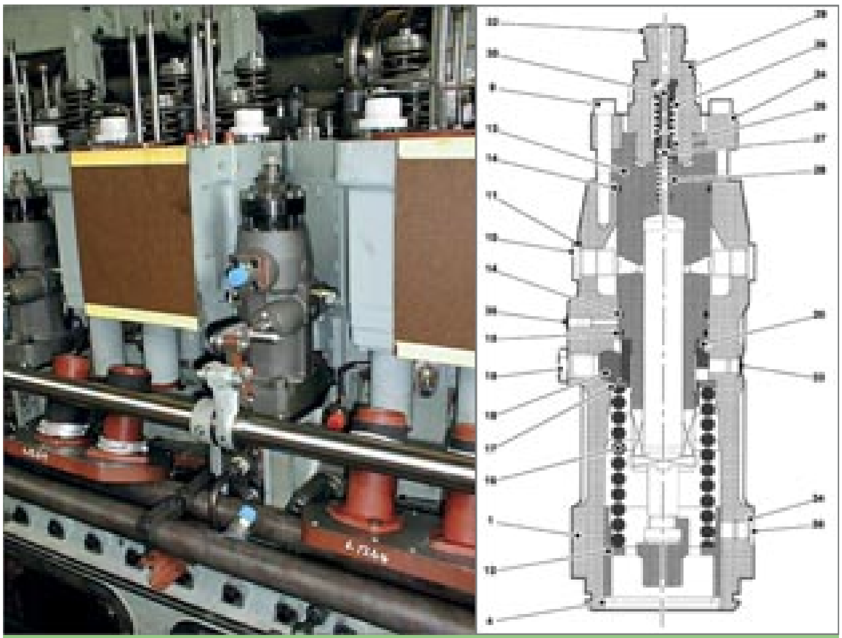

Figure 10: Injection Pump (left), Injection Pump Cross-Section (right)

that if the busrail temperature swings a degree or two from the ring-main set point, it will always be at, or above, ring-main temperature. The steam heater uses a PID algorithm in the PLC to control the temperature of the fuel in the busrail, and match that temperature to the ring-main. The typical operating temperature is 150- 152 °C.

The changeover valves control whether distillate or HFO is delivered to the engine. When HFO is selected the fuel returns from the engine via the changeover valves to the backpressure valve and to pump suction. Meanwhile, the distillate re-circulates through the changeover valves. When distillate is selected the opposite happens, with distillate re- circulating around the engine and HFO re- circulating through the changeover valves. When changing from HFO to distillate the purge valve operates for 10 sec's. which allows HFO in the engine supply piping to flow back to the HFO Service Tank while distillate is entering, thereby flushing the HFO out of the engine system.

Distillate fuel is drawn, by gravity, from the Distillate Service Tank through a volumetric flow meter, booster pump, duplex 5-micron filter and the changeover valves to the engine. From the engine the distillate returns via the changeover valves, to a backpressure valve and back to pump suction. Distillate is circulated at a rate of 1.5 x the engine fuel consumption and continues to operate when the engine is on HFO.

The change-over valves are controlled by an electro-pneumatic actuator and the following seven conditions must be met before the engine can switch to HFO – a) the HFO/LFO selector switch must be in the HFO position b) the engine must be loaded to 30% or more c) the busrail viscosity logic must be indicating that the busrail is ready for operation and without fault d) the HFO busrail pressure must be at or above 7.0 bar e) the jacket water temperature is at or above 60 °C f) the engine must be running g) the distillate pump must be running.

N.B. Positive displacement type HFO fuel meters were supplied originally, but these proved to be unsuitable as the thermoplastic rotors seized-up due to swelling of the material and no improved substitute was available. The meters were changed to Coriolis type, at great expense.

The Injector Cooling System comprises of a pump, a duplex 5-micron filter and a heat exchanger that is cooled by jacket water. Distillate fuel is re-circulated through the fuel injectors in a closed loop system, except that a small amount of fuel is bled-off to the Distillate Service Tank, which is made-up from the busrail system.

Steam System – The only requirement for steam in the plant is for fuel and lubricating oil heating. A steam pressure of 6.9 bar (100 psig) was chosen in order to achieve an economical design for the fuel heaters i.e. a sufficient temperature differential. The calculated steam consumption for the plant is approx. 1800 kg/h, which is only a small percentage of the waste heat that is available in the engine exhaust. The steam consumption is also directly proportional to the number of engines running, plus a constant for the common services, such as fuel treatment and tank heating.

There are two ways to control steam output, a) control the exhaust gas flow through the waste-heat boiler or b) condense the excess steam in a dump condenser. Due to the high cost of exhaust gas diverting valves for an engine of this size (1168 mm/46 ins. dia.), a cost analysis showed that b) was the most cost-effective solution, using water tube type steaming economisers on each engine. Each economiser is sized to generate sufficient steam for one engine, plus the common services. Hot water at 170 °C is circulated through the economisers, at approx. 12 x the steaming rate, with the exhaust gas providing the sensible heat to maintain this temperature and latent heat to form the steam bubbles which separate out in the common steam drum. Each economiser has a dedicated feed water pump that runs when the engine is operating, plus a common standby.

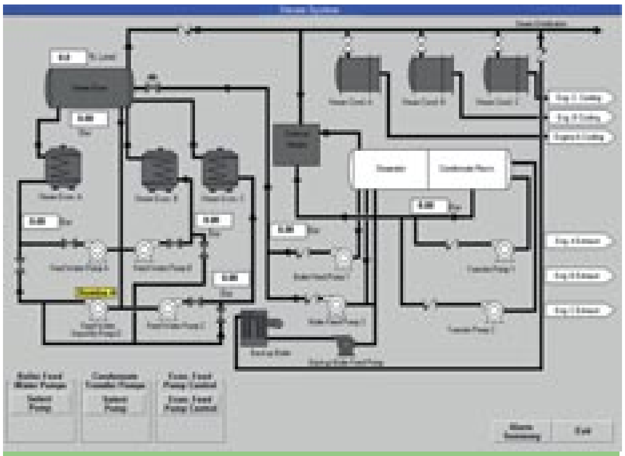

Figure 11: Steam System

To control the steam pressure, a small dump condenser is installed at each engine, cooled by the engine secondary water system. Feed water make-up is provided from a deaerator that is, in turn, fed from a condensate tank that receives all the condensate returns from around the plant. The water treatment plant, described later supplies make –up water.

An Emergency/Stand-by Packaged Boiler has also been provided that operates on distillate fuel. This boiler has been sized to provide sufficient steam for the common services, in the event that no engines are operating. The Steaming Economisers are equipped with steam soot-blowers, manually operated, to maintain the efficiency and hence output of the unit.

Water Treatment System – The water treatment system design is based on the water analysis obtained from the site. Treated water is required for boiler feed make-up, centrifugal separator operating and sealing, engine turbocharger washing and cooling system make-up. The treatment system is modularised and comprises a city water storage tank, two booster pumps (duty and standby), a pressurised water tank, activated carbon filter, water softener with brine tank, a reverse osmosis system, a caustic soda feed system and a treated water pressure tank. The treatment system is fully automated.

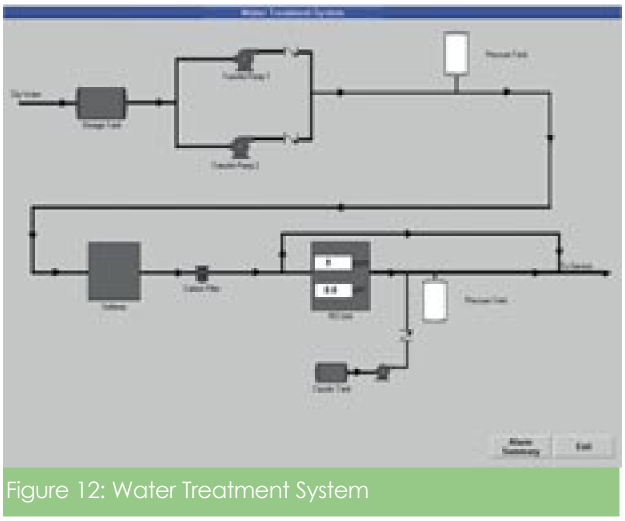

Figure 12: Water Treatment System

N.B. The capacity of the treatment system is based on the water consumption data provided by the equipment vendors. Some of the usage is on an intermittent basis and an estimate of the maximum demand and it's duration has to be made. This estimate, or possibly the consumption data provided, proved to be incorrect which resulted in pressure fluctuations in the system, which had an adverse affect on the operation of the fuel and lubricating oil centrifugal separators, mentioned earlier. The limiting factor controlling the capacity of the treatment plant is the reverse osmosis system, which is only necessary for the boiler feed water. The solution to the problem was to install a bypass around the reverse osmosis unit to supply two additional pressurising tanks, one in the fuel treatment building supplying the fuel separators and one in the main plant supplying the lubricating oil separators plus the balance of the equipment.

Lubricating Oil System – The engine lube oil system is based on the wet-sump principle, using two engine driven pumps operating in parallel drawing the oil from the sump and circulating it through a heat exchanger, a thermostatic valve, a full flow 10 micron filter and back to the engine. The filter has four canisters, any three of the four always in operation. A motor driven priming pump is provided, that is also used for emptying the engine sump.

Lube oil is continuously drawn from the sump, passes through a centrifugal separator system to remove water and insolubles and returns to the sump. The insolubles result from products of combustion entering the crankcase, which is inevitable with trunk piston engines, thereby contaminating the lube oil. The lube oils are specially formulated to neutralise the affects of these contaminants, but the most effective way to remove them from the oil is by centrifuging. The system is modularised and comprises a feed pump, a steam heater to raise the temperature of the lube oil to 77 ^{0}C for optimum separation, and an Alfa Laval ALFAX Model FOPX 709 centrifugal separator that is fully automatic in operation. The base of the module forms a sludge tank that collects the discharge from the separator and is emptied by a sludge pump controlled by a level switch in the tank.

Lube oil is cooled using a plate type heat exchanger, the heat being rejected to the secondary water radiator circuit. A Dirty/Clean Lube Oil Transfer system has been provided for the plant. Used or contaminated lube oil is transferred from each engine, using the engine priming pump, in to a 2.5

m3 (500 gal.) holding tank. This oil is later transferred to the HFO Bulk Storage Tank for disposal by burning in the engine.

The new or clean lube oil is stored in a 2.5 m3 (500 gal) holding tank. A transfer pump supplies oil under pressure, through a flow meter, to a header that has a connection at each engine. From this connection oil is supplied to each engine through a flexible hose and a gas- pump type nozzle. Oil is manually added to the engine, as necessary, up to the "full" mark on the dipstick.

At the connection to each engine, there is a flow switch that detects when oil is being supplied to that particular engine; this flow switch provides a signal to the PLC to assign the oil flow measured by the meter to this engine. This is used to calculate the lube oil consumption.

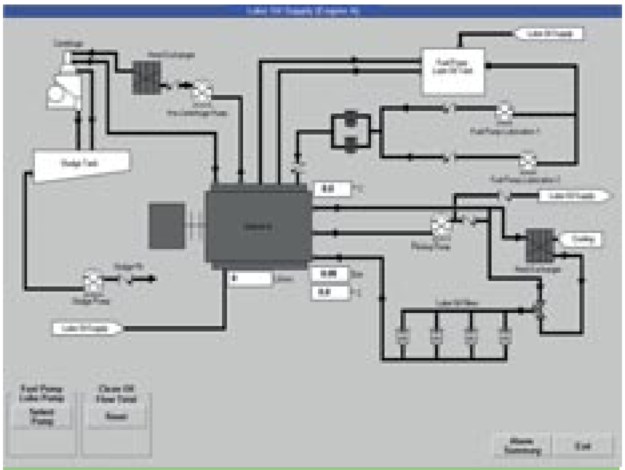

Figure 13: Lube Oil Supply System

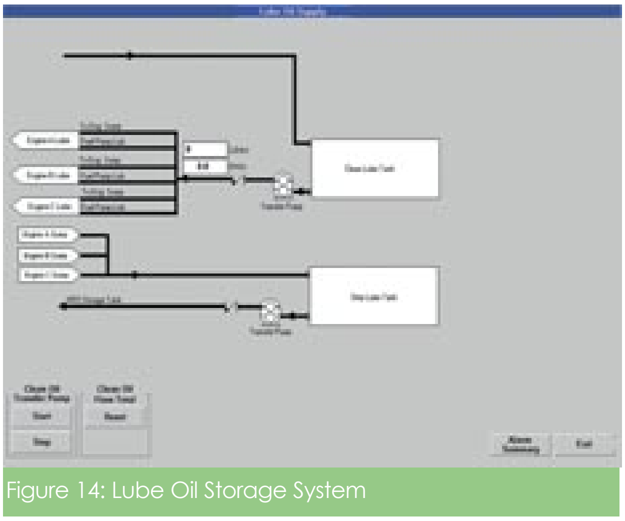

Figure 14: Lube Oil Storage System

Cooling Systems - The cooling system is in two parts a) Jacket Cooling and b) Secondary Cooling.

The Jacket Cooling system cools the engine cylinders, the Exhaust Valve Cages and dissipates the heat from the Fuel Injectors. The system comprises a motor driven pump, a thermostatic valve, a make-up and expansion tank and a multi-fan forced-draft outdoor mounted radiator. There are three fans on each radiator that start when the engine is started and continue to run, with the jacket water pump, for 15 minutes when the engine is stopped to provide after- cooling.

The Secondary Cooling system dissipates the heat from the lube oil cooler, the engine combustion air intercoolers and the steam dump-condenser. The system comprises a motor driven pump and a multi-fan forced-draft outdoor mounted radiator. The make-up and expansion tank is common to jacket system. The radiator is in two sections, operating in parallel, each section having six fans, for a total of twelve. The fans are operated on an as-needed basis to regulate the radiator outlet temperature and to conserve energy. A minimum of two fans will operate for 15 minutes when the engine is stopped, for after-cooling. To equalise the wear on all the fans, they are periodically rotated under the PLC control.

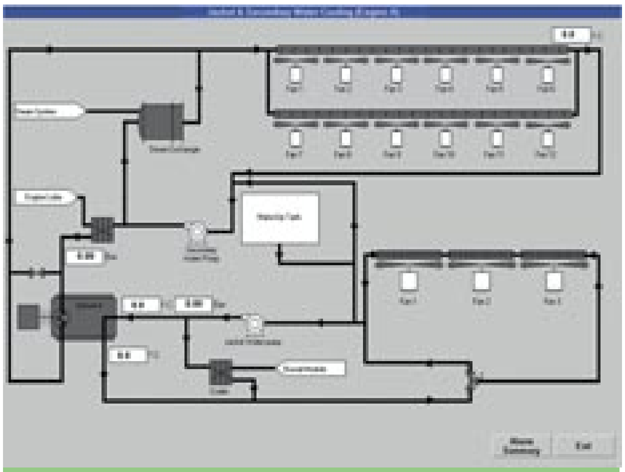

Figure 15: Jacket & Secondary Water Cooling System

N.B. Careful consideration was given at the design stage, to the siting of the radiators in order to avoid hot air re-circulation. This took into account their physical location and the direction and strength of the prevailing wind. In spite of this, re-circulation does occur under certain operating and climatic conditions and results in higher than design temperature at the discharge of the secondary water radiators. Fortunately, this increase in temperature does not affect the cooling of the combustion air or the lub oil and that is attributed to the generous design margins in these heat exchangers. On future projects, induced draft fans should be considered, even though they are more expensive, in order to increase the exit velocity of the cooling air and reduce the likelihood of re-circulation.

Air Intake and Exhaust System - The engines are equipped with two ABB VTR 454 turbochargers, one per bank of cylinders, mounted with the Intercoolers on a separate support structure adjacent to the non-drive end of the engine. A sensor located on the support structure monitors turbocharger vibration.

The air intake systems each comprise of an outdoor mounted oil bath type filter (dusty environment), an absorption silencer and an intercooler.

The exhaust system comprises a water tube type steaming economiser with two exhaust inlets and a single outlet, an absorption silencer and a 35 m (115 ft) high free-standing stack. The noise level criteria specified are 80dbA at a distance of 60 m from the exhaust stack centre line. The three exhaust stacks are grouped close together in a triangular formation such that they could be tied together for mutual support and they are free standing. An exhaust gas analyser is installed in a weatherproof enclosure, adjacent to the stacks, capable of monitoring NOx, SO_2, CO_2, CO and O_2.

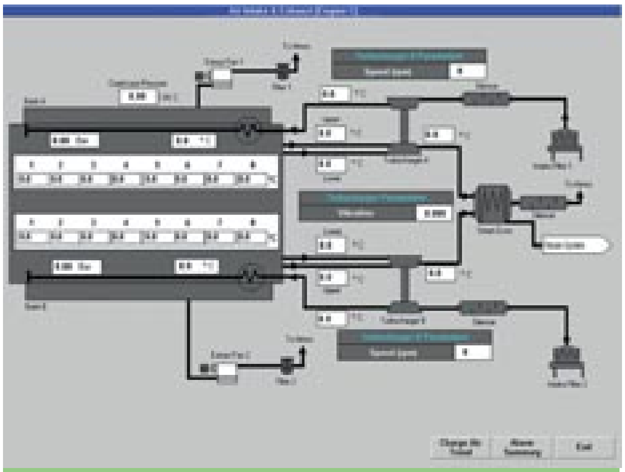

Figure 16: Air Intake and Exhaust System

There are two Crankcase Extractor Fan systems installed per engine each comprising a motor driven fan unit, flame arrester, non-return valve, flow control valve and coalescer filter. The extractor systems are adjusted to maintain a vacuum in the crankcase of 0.75 ins. Wg under full load conditions.

Compressed Air Systems - The compressed air systems comprise of Starting Air and Instrument Air;

The engines are started using the air-over-piston method whereby 27.5 bar (400psi) compressed air is injected into all 16 cylinders in sequence to crank the engine to approx. 100 rpm, when fuel is admitted. Acceleration up to the operating speed of 514 rpm is controlled by the electronic governor.

Starting air is stored in air receivers (one per engine), each having a capacity of 1.7 m^3 and, when fully charged, are capable of starting the engine six times.

Three compressors have been installed, two motor driven, one diesel driven. The capacity of each compressor is sufficient to fully charge one air receiver from atmospheric pressure to 27.5 bar in 40 minutes. The two motor driven units are controlled by the PLC via pressure sensors in the receivers. The compressors operate singly and the duty is alternated each time they are called upon. The diesel driven unit is used for black-starting the engines when the plant auxiliary AC power is not available.

Instrument air is provided by a separate compressor that is also equipped for air filtration and drying. The air is stored in a 1.7 m^3 capacity receiver at a pressure of 6.9 bar (100 psi) from where it is distributed around the plant and reduced in pressure locally, as necessary. For emergency use there is a connection to the instrument air receiver from the 27.5 bar starting air system, through a pressure control valve, should the instrument air compressor fail.

Plant Layout - The power plant consists of the main engine hall, a mechanical annexe running the full length of the building on one side, an electrical annexe on the other side and a separate fuel treatment building at the corner. The main engine hall has four 9.0-m bays, one for each engine plus a lay-down area for use during maintenance. (It should be noted that the workshop facilities are located in a separate building at the site, provided by others). A 20 tonne capacity, top running, overhead bridge crane has been installed with a 5.0 tonne capacity auxiliary hoist. The crane can lift the heaviest engine component or the generator rotor or stator. Sufficient space is provided to thread the generator rotor into the stator.

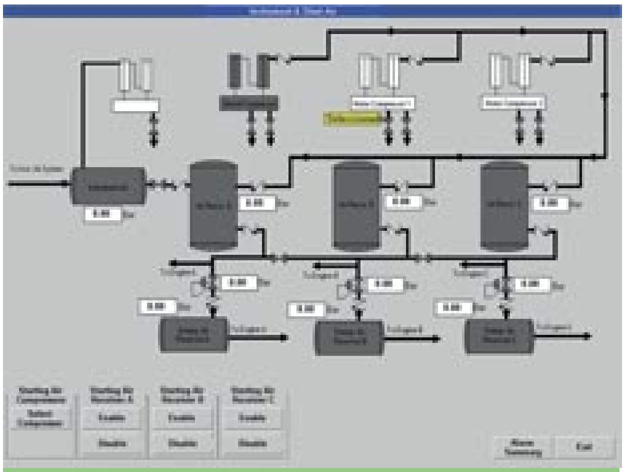

Figure 17: Instrument Air & Staring Air Systems

The mechanical annexe houses all the engine auxiliary equipment, which in most cases has been pre-assembled onto modules (or skids) for ease of installation and compactness. The roof of the annexe is used to support items of equipment that need to be elevated, such as header tanks, crankcase extractor fans and the distillate fuel service tank. The annexe adjacent to the lay-down area is used for the common plant mechanical auxiliaries, such as steam and condensate, water treatment and compressed air.

The electrical annexe is two stories. The upper level houses the medium voltage (13.8 kV) and low voltage (380 V) switchgear room and the control room. The lower level has an office/lunch room adjacent to the lay-down area and the motor control centres adjacent to the engines. The latter area also provides the ventilation air intake for the building.

The piping between the engines and the auxiliaries is located in floor trenches where possible, or overhead in the mechanical annexe where it must be elevated. Electrical cabling within the engine hall and mechanical annexe is also located in floor trenches, housed in cable trays for protection. Ventilation for the plant is provided by induced draft fan units, two per engine bay, located on the roof above the turbochargers. Ventilation air is drawn into the plant through wall louvers and filters in the electrical annexe, passes the generator first, to provide the coolest air, then passes over the engines and out through the roof. The air flow is designed to maintain the temperature in the building to within 10 ^{O}C of the highest ambient temperature of 30 ^{O}C.

The fuel treatment building houses the fuel treatment centrifuge modules, the ring-main module and the fuel control panel. The roof of the building supports the Pre-centrifuge Tank, the HFO Service Tank and the Ring-main Pressurising pumps, all of which have to be elevated.

It is envisaged that the future plant expansions will be in the form of two additional plants, identical to this one, abutting each end of this building.

Power System - The output of each generating set is produced by a synchronous generator of Brush Electrical Machines manufacture. They are of brushless design with a shaft-mounted permanent magnet pilot exciter providing power for the excitation system.

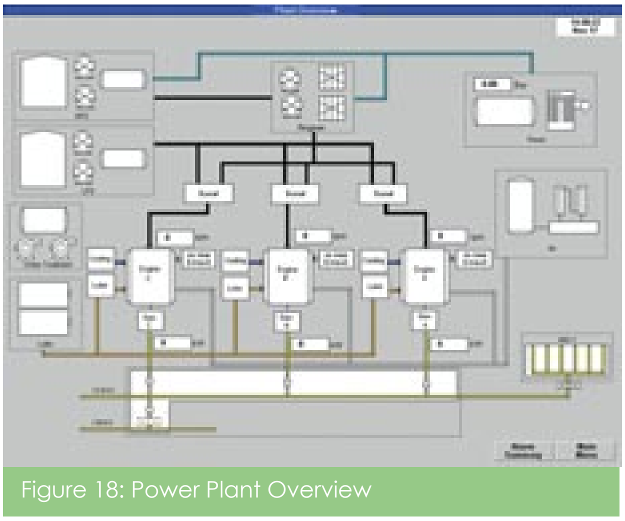

Figure 18: Power Plant Overview

The machines have filter ventilated enclosures. Regular maintenance is required at each engine overhaul period to remove, what appears to be, a white saline deposit. The Power Plant is only about 1 km from the ocean and at certain times the atmosphere is quite moist and obviously carries a salty deposit which finds its way through to the internal surfaces of the generator.

The generators are rated: -
10566 kW @ 0.8 pf, 13.8 kV, 60 Hz, 514 rpm, full load current of 553 Amps and guaranteed efficiency of 96.4% at 100% load and 0.8 pf.

The voltage regulator is a Brush Modular Automatic Voltage Regulator (MAVR) which is mounted in the Generator Control Panel in the Plant Central Control Room. The line side of the generator is cabled to a 13.8 kV, 750 MVA switchboard equipped with Square D vacuum circuit breakers.

Each generator circuit has a primary and secondary protection system. The primary system is provided by a GEC ALSTOM, state of the art, Digital Integrated Generator Protection Relay, Type LGPG, and the secondary system by individual relays for the various functions such as differential, field failure, negative sequence, etc. This system, specified by the Peruvian Consultant, may be considered somewhat “overkill” when compared to the lack of redundancy elsewhere in the electrical system. Multi-function instrumentation is provided at the switchgear by the Square D PowerLogic System.

Power is taken from the switchgear via a single Feeder Circuit Breaker to a single Main step-up Power Transformer, rated 50 MVA, 13.8 kV to 138 kV. Hence, the total output of the Plant, other than the local parasitic load of approximately 1500 kVA, is fed into the 138 kV Transmission System.

N.B. On initial commissioning, there was a problem with a high voltage condition at the generator bus. The Customer’s first reaction was to blame the voltage regulators, claiming that they were not responding to control the System voltage. Although

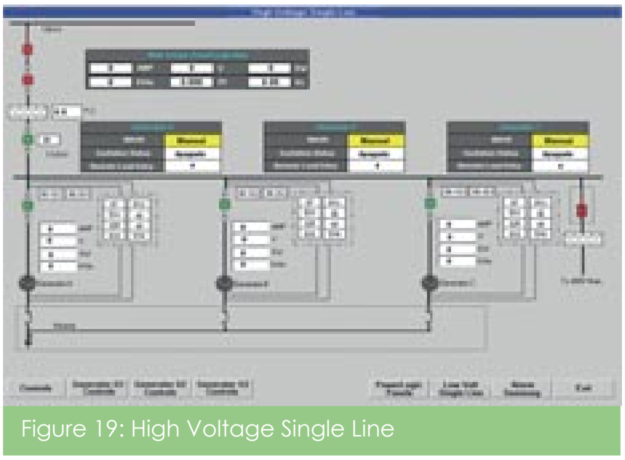

Figure 19: High Voltage Single Line

we never got them to admit as much, they eventually recognised the need to get back to the basics of transmission line theory and introduce the necessary VAr compensation into the System to cater for the full range of load flow conditions on the interconnected transmission system. The situation wasn't helped by the Main Power Transformer having been specified to have Off-Load Tap Changing only.

Without getting into detailed theory, it is accepted practice that, with known electrical characteristics of an interconnected power transmission/distribution system, the real and reactive power fed into and out of a transmission line can be plotted as a function of the sending-end and receiving-end voltages. If you know, as you do in this case, the real power being fed into the system, the other three power quantities (reactive power in, real power out, reactive power out) are uniquely determined for given voltages at the two ends of a line. Hence it makes it possible to pre-determine the amount of VAr compensation that is required to supply a given load over a given line whilst maintaining the required magnitudes of voltage at the sending and receiving end.

PLC/SCADA System - The Plant has automatic control and monitoring provided by a Schneider Automation PLC/SCADA System. The PLC Processor is an AEG Modicon Quantum CPU with 2 Megs of RAM and including a math co-processor. A local system integrator in Oakville, using the "Concept" programming language programmed the system.

The SCADA software is Schneider Monitor Pro, formerly US Data FactoryLink, running on a Pentium 166 MHz PC, which was state of the art in terms of computing back in 1997.

The System can be displayed in a choice of either English or Spanish and has a total of 80 individual screens, of which about 30 are applicable to the Systems common to the total Power Plant, with the remainder devoted to the individual unit Generating Set Systems. A particular Screen can be picked off the Main Menu Screen or by clicking on the appropriate icon on the Plant Overview Screen

Any of the three Generating Sets can be started locally at the LECP or, more usually, by selecting the 'START' icon on the Computer Screen in the Control Room. A number of criteria have to be satisfied for a successful start, such as healthy alarms, starting of essential auxiliaries, etc. Once the set has fired and run up to speed, an 'Auto Sync.' signal is issued to the automatic synchronising system. These sets are equipped with Woodward UG 40 electric actuators, 723 Digital Control and Digital Synchronisers and Load Controls (DSLC).

The synchronising function is accomplished independent of the PLC System and, once the Generator Circuit Breaker has been closed, the

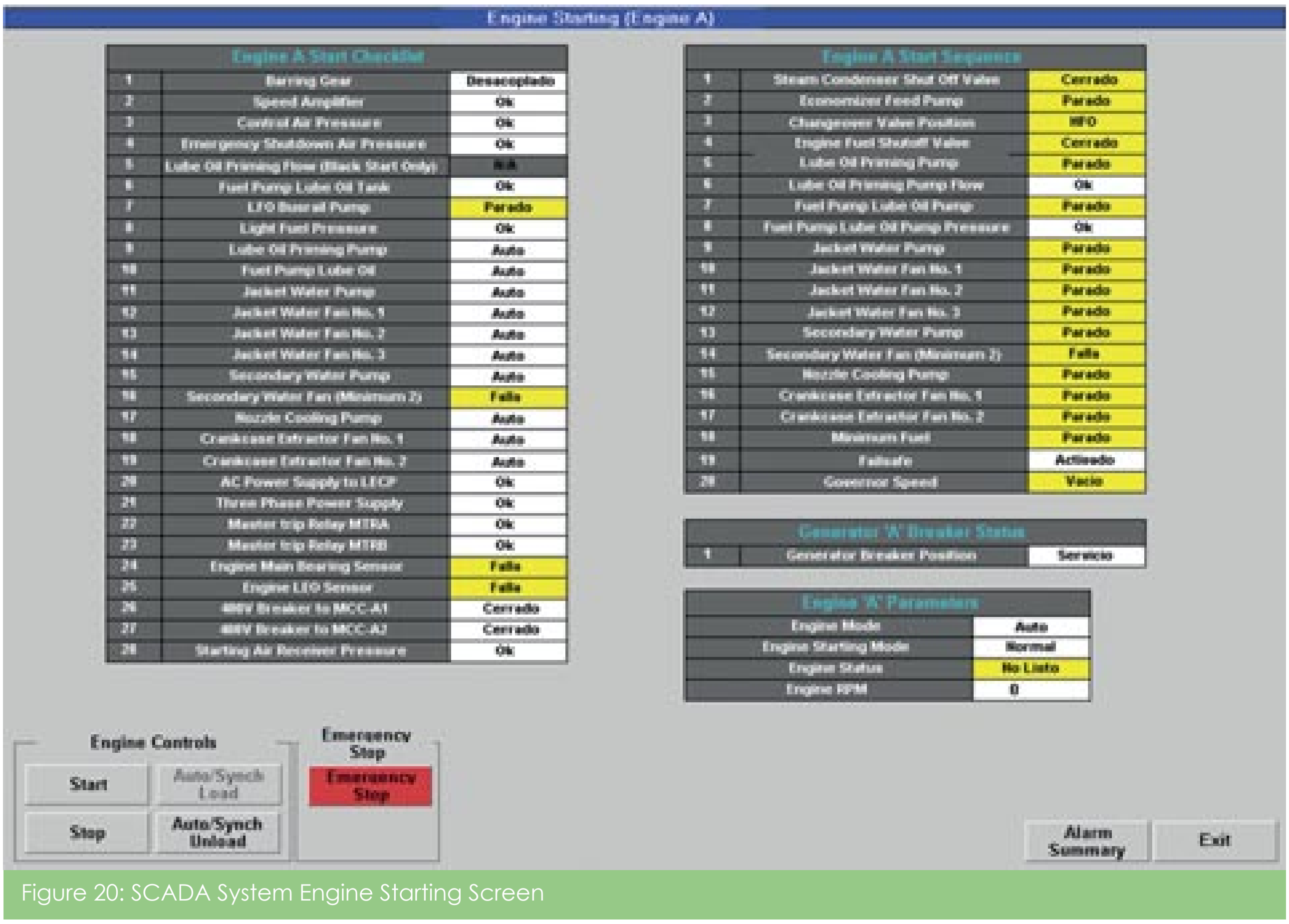

Engine A Start Checklist		
1	Barring Gear	Desacoplado
2	Speed Amplifier	Ok
3	Control Air Pressure	Ok
4	Emergency Shutdown Air Pressure	Ok
5	Lube Oil Priming Flow (Black Start Only)	N/A
6	Fuel Pump Lube Oil Tank	Ok
7	LFO Booster Pump	Parado
8	Light Fuel Pressure	Ok
9	Lube Oil Priming Pump	Auto
10	Fuel Pump Lube Oil	Auto
11	Jacket Water Pump	Auto
12	Jacket Water Fan No. 1	Auto
13	Jacket Water Fan No. 2	Auto
14	Jacket Water Fan No. 3	Auto
15	Secondary Water Pump	Auto
16	Secondary Water Fan (Minimum 2)	Falla
17	Nozzle Cooling Pump	Auto
18	Crankcase Extractor Fan No. 1	Auto
19	Crankcase Extractor Fan No. 2	Auto
20	AC Power Supply to LECP	Ok
21	Three Phase Power Supply	Ok
22	Master trip Relay MTRA	Ok
23	Master trip Relay MTRB	Ok
24	Engine Main Bearing Sensor	Falla
25	Engine LEO Sensor	Falla
26	400V Breaker to MCC-A1	Cerrado
27	400V Breaker to MCC-A2	Cerrado
28	Starting Air Receiver Pressure	Ok

Engine A Start Sequence		
1	Steam Condenser Shut Off Valve	Cerrado
2	Economizer Feed Pump	Parado
3	Changeover Valve Position	HFO
4	Engine Fuel Shutoff Valve	Cerrado
5	Lube Oil Priming Pump	Parado
6	Lube Oil Priming Pump Flow	Ok
7	Fuel Pump Lube Oil Pump	Parado
8	Fuel Pump Lube Oil Pump Pressure	Ok
9	Jacket Water Pump	Parado
10	Jacket Water Fan No. 1	Parado
11	Jacket Water Fan No. 2	Parado
12	Jacket Water Fan No. 3	Parado
13	Secondary Water Pump	Parado
14	Secondary Water Fan (Minimum 2)	Falla
15	Nozzle Cooling Pump	Parado
16	Crankcase Extractor Fan No. 1	Parado
17	Crankcase Extractor Fan No. 2	Parado
18	Minimum Fuel	Parado
19	Failsafe	Activado
20	Governor Speed	Vacio

Generator 'A' Breaker Status		
1	Generator Breaker Position	Servicio

Engine 'A' Parameters	
Engine Mode	Auto
Engine Starting Mode	Normal
Engine Status	No Listo
Engine RPM	0

Figure 20: SCADA System Engine Starting Screen

Operator can select to 'ENABLE' the Remote Load Reference on the Generator Control Screen and enter in a value of load in kW that he wishes to load the Genset to, as the System is normally selected to BASE LOAD to the reference value. The governor system then loads up to the selected load value by comparing the feedback value of load signal received into the DSLC against the calibrated load signal being given.

Similarly, the system normally operates with the local Generating Sets selected for constant power factor, in this case at the Customer determined value of 0.92 lagging. This decision to run under pf control is Operator selected (ENABLED) with the value having been pre-programmed into the DSLC. The DSLC achieves this by constantly pulsing the MAVR. The System Voltage is determined by the interconnected Utility System, so any RAISE or LOWER signal issued to the MAVR will determine the amount of reactive power being generated.

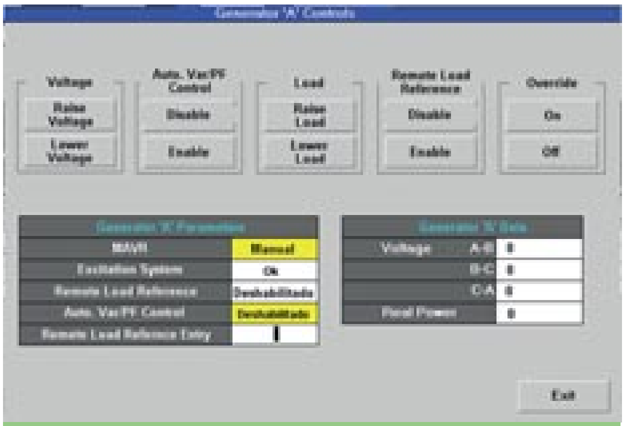

Generator 'A' Parameters	
MAVR	Manual
Excitation System	On
Remote Load Reference	Deshabilitado
Auto. Var/PF Control	Deshabilitado
Remote Load Reference Entry	

Generator 'A' Data		
Voltage	A-B	0
	B-C	0
	C-A	0
Real Power		0

Figure 21: SCADA System Generator Control Screen

N.B. For quite a while, we were experiencing a problem with controlling at constant power factor. On synchronising, the incoming Genset did not always control to the required pf, most usually at a much lower pf than required. My belief was that this was something to do with the MAVR voltage set point on shutdown, and the DSLC was not able to issue the necessary correction signal if it was outside a certain range. Eventually Woodward who replaced the microprocessor chips in the DSLC with ones that had been programmed with a revised algorithm satisfactorily addressed this problem.

The SCADA System generates an hourly report for each Engine which contains a line item for every temperature, pressure, etc., that is being monitored. Similarly, it generates an hourly report of the electrical quantities available via the PowerLogic meters fitted to each of the 3 Generator Circuits and the Main Feeder Circuit. These quantities include Phase Current, Line Voltage, Real Power, Reactive Power, accumulated kWh, etc. Instantaneous values are available by selecting the HV PowerLogic Panels Screen.

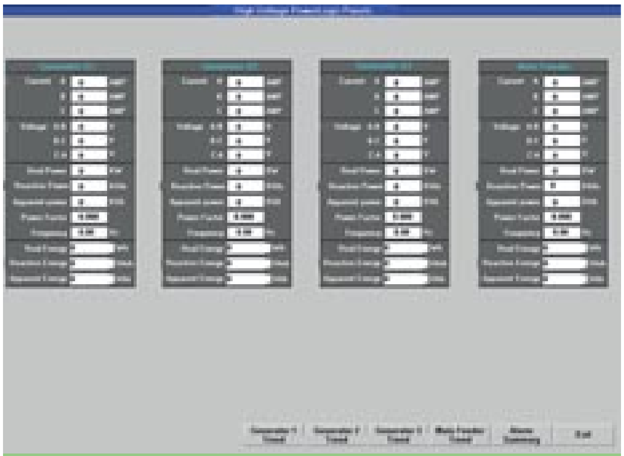

Figure 22: SCADA System Power Logic Panels Screen

The Power Plant has a 1500 kVA, 13.8kV/400V Auxiliary Services Transformer which distributes power to a number of Motor Control Centres via a 400V Distribution Board. The Branch Circuits are monitored via PowerLogic PM 600 Power Meters and this information, Phase Current, Line Voltage, Real Power, Power Factor and Real Energy is available at the SCADA terminal.

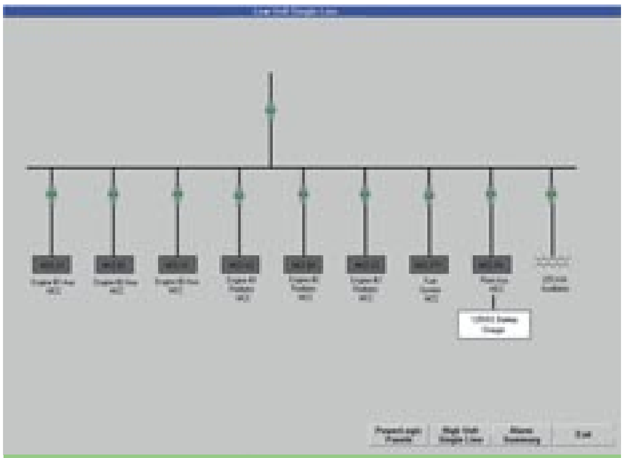

Figure 23: SCADA Low Voltage Screen

In addition, a number screens have been set up for trending against time and engine load, of such quantities as: -

- Cylinder Exhaust Gas Temperatures
- Engine and Generator Bearing Temperatures
- Genset efficiency
  (fuel consumed v.energy produced)
- Charge Air Temperatures and Pressures
- Current, Voltage, Real and Reactive Power for the Generators, Main Feeder and Auxiliaries

The System also generates an Alarm Summary and History Report. ■

Author Colin W. Dawson.

Review and incorporation of figures by George Cooper.